Sheet: Hub

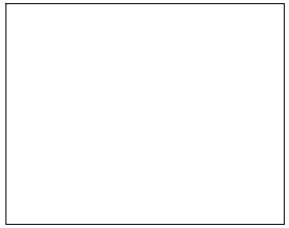

File: Hub.sch

Sheet: MCU_PIC

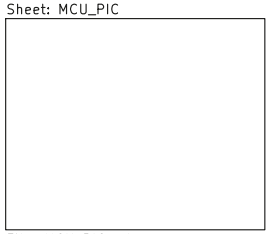

File: MCU_PIC.sch

Sheet: PCR

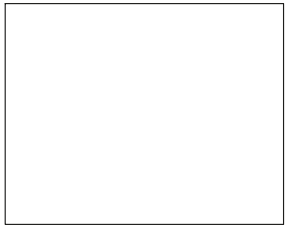

File: PCR.sch

Sheet: /
File: CamPCR.sch

Title:

Size: A4	Date:	**Rev:**
KiCad E.D.A. kicad (5.1.9)-1		Id: 1/4

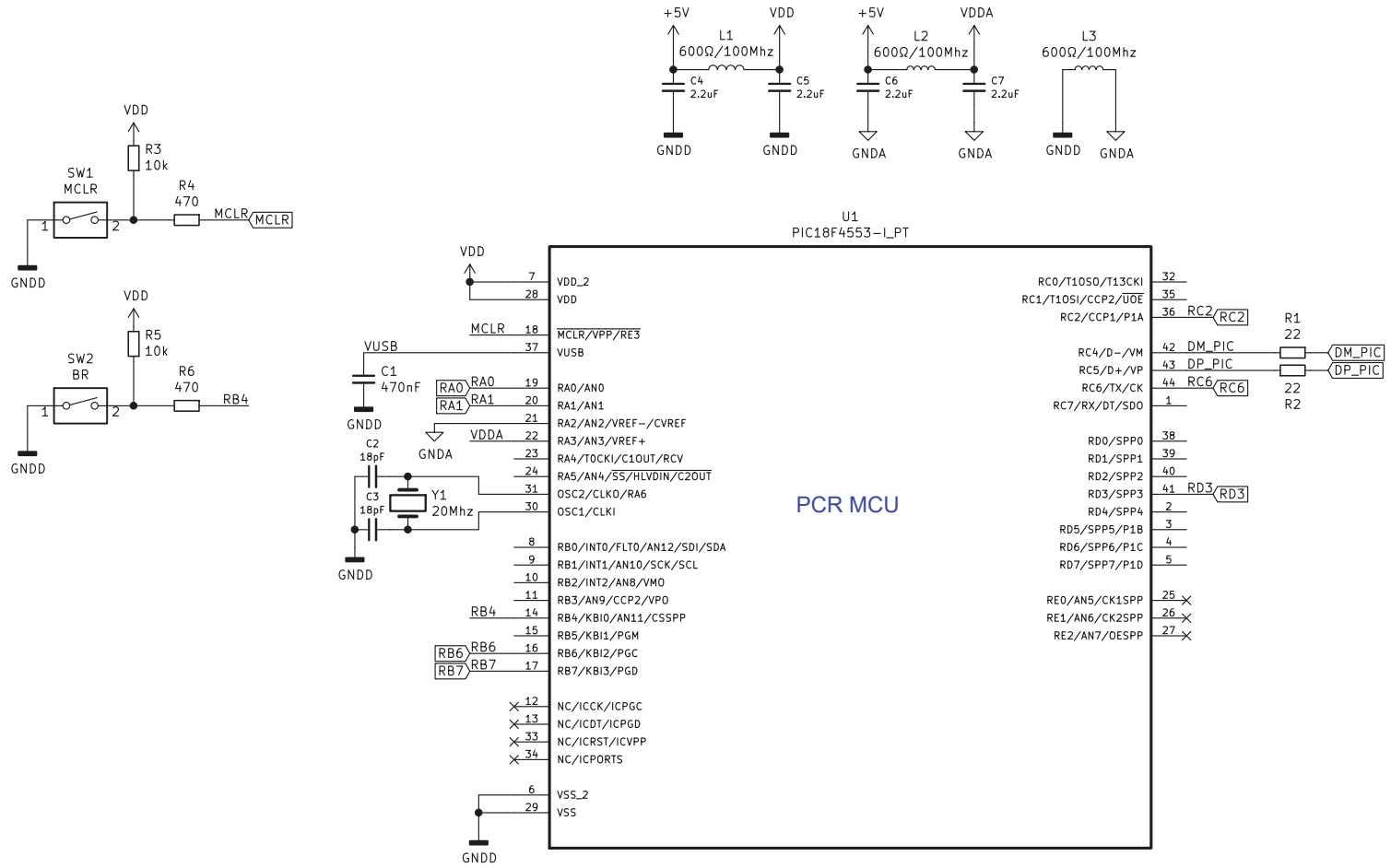

PCR MCU (PIC 18F4553)

Sheet: /MCU_PIC/
File: MCU_PIC.sch

Title:

Size: A4	Date:	**Rev:**
KiCad E.D.A. kicad (5.1.9)-1		Id: 2/4

PCR chip heater pattern

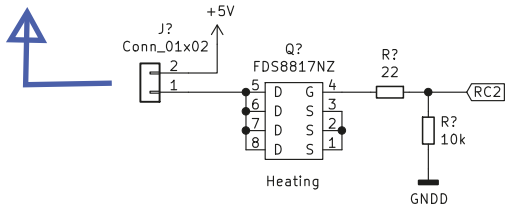

PCR chip thermistor

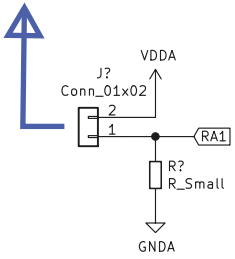

FAN

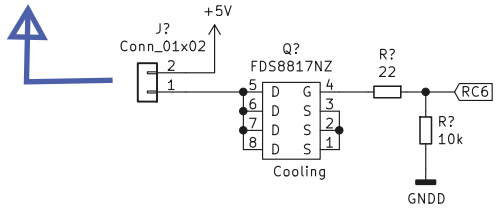

PCR chip and FAN driving FET's

Sheet: /PCR/
File: PCR.sch

Title:

Size: A4	Date:	**Rev:**
KiCad E.D.A. kicad (5.1.9)-1		Id: 3/4

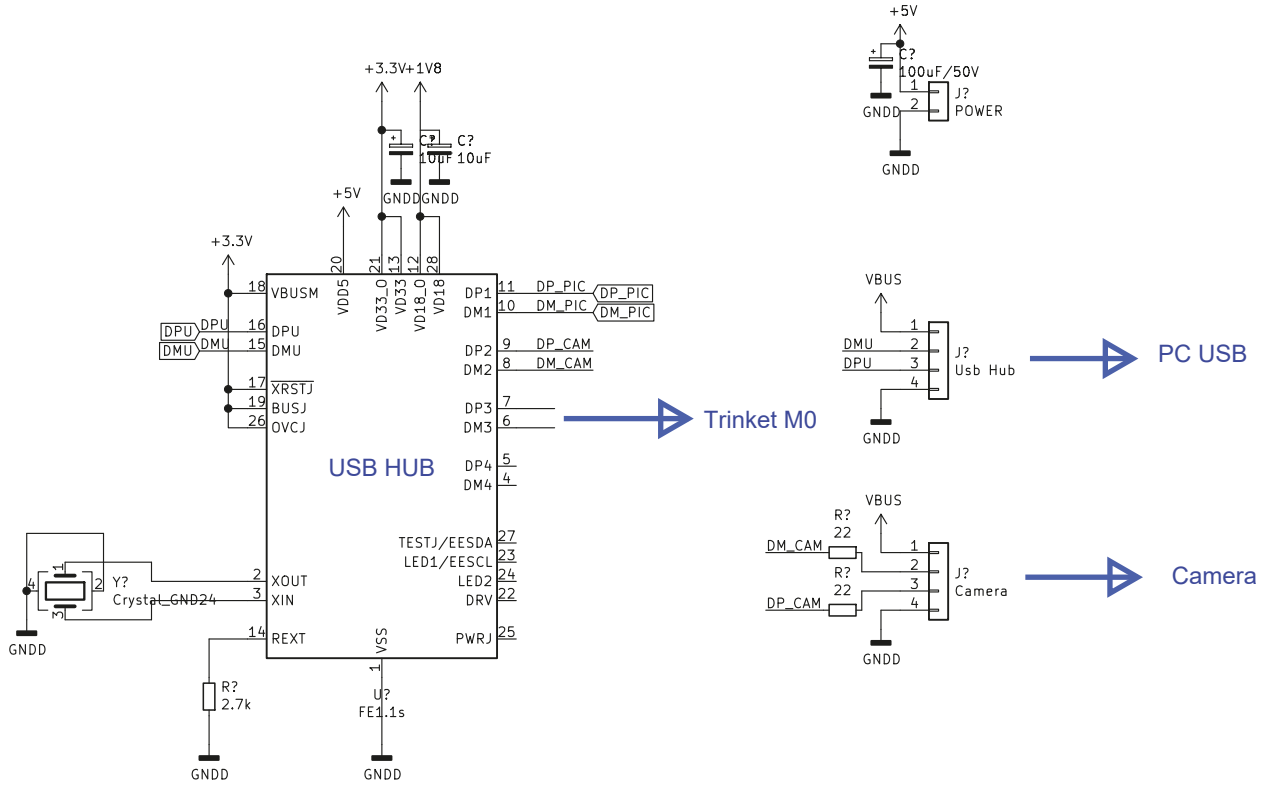

Trinket M0 breakout board (connected via jumper wires)

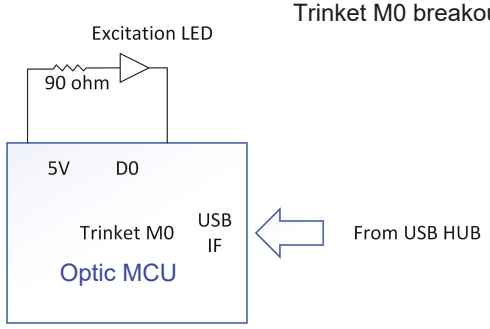

Trinket M0 module was externally connected via jumper wires to control the excitation LED.
Its schematic is shown for completeness and modular clarity.

USB HUB in Figure 2

Sheet: /Hub/ File: Hub.sch		
Title:		
Size: A4	Date:	**Rev:**
KiCad E.D.A. kicad (5.1.9)-1		Id: 4/4